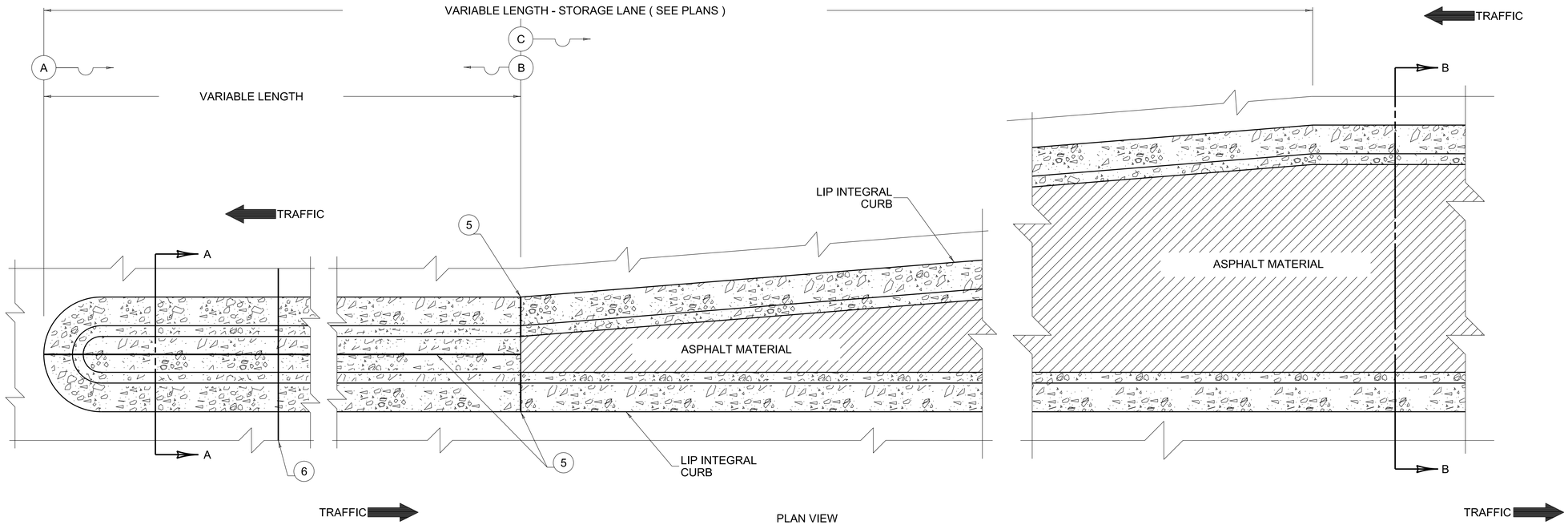

PLAN VIEW

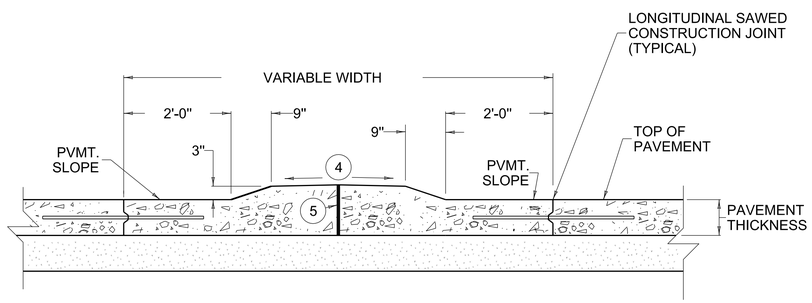

SECTION A-A

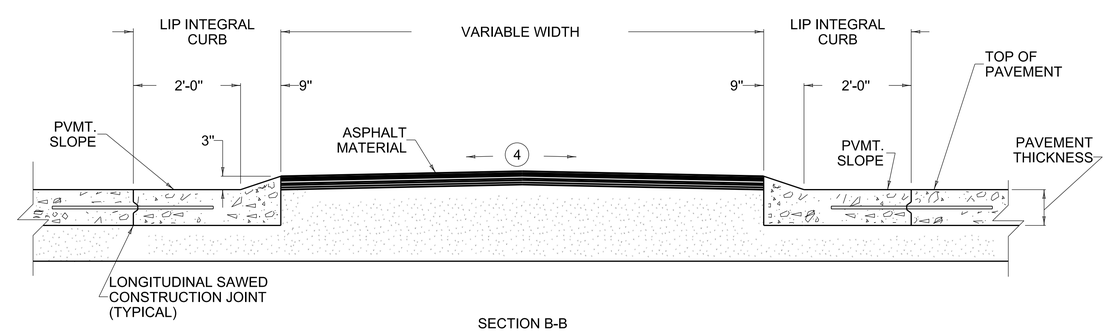

SECTION B-B

~ NOTES ~

1. *THE BID ITEM PER SQ. YD. BETWEEN POINTS (A) AND (B) SHALL BE "MOUNTABLE MEDIAN TYPE 7A".*
2. *THE VARIABLE LENGTH MOUNTABLE MEDIAN BETWEEN POINTS (A) AND (B) SHALL MEET THE CURRENT REQUIRMENTS OF STANDARD SPECIFICATIONS FOR ROAD AND BRIDGE CONSTRUCTION, CURRENT EDITION.*
3. *LIP INTEGRAL CURB TERMINATES AT POINT (C) (SEE PLANS).*

(4) *CROSS SLOPE OF 2% ON TANGENTS AND PARALLEL PAVEMENT CROSS SLOPE ON SUPERELEVATED SECTIONS.*

(5) *½" PREMOLDED EXPANSION JOINT MATERIAL.*

(6) *TRANSVERSE JOINTS IN THE MOUNTABLE MEDIAN BETWEEN POINTS (A) AND (B) SHALL BE CONSTRUCTED AND SEALED IN THE SAME MANNER AS THE JOINTS IN THE ADJOINING CONCRETE PAVEMENT.*

BID ITEMS AND UNIT TO BID

MOUNTABLE MEDIAN TYPE 7A	*SQYD*
LIP INTEGRAL CURB	*LF*

INTENDED USE:
WITH RIGID PAVEMENT

USE WITH CUR. STD. DWG.
RPM-100

REVISION DATE: 12/01/2015
REVISION NUMBER: 0

SUBMITTED — DIVISION DIRECTOR — 12-01-2015 DATE

APPROVED — STATE HIGHWAY ENGINEER — 12-01-2015 DATE

PAVEMENT

COMMONWEALTH OF KENTUCKY
DEPARTMENT OF HIGHWAYS

TEAM KENTUCKY TRANSPORTATION CABINET

MEDIANS

MOUNTABLE MEDIAN TYPE 7A

STANDARD DRAWING NUMBER
RPM-015-04